M156AD Rugged Tablet PC

39,62 cm (15,6") 16:9 LCD
Net weight: 2,8 kg

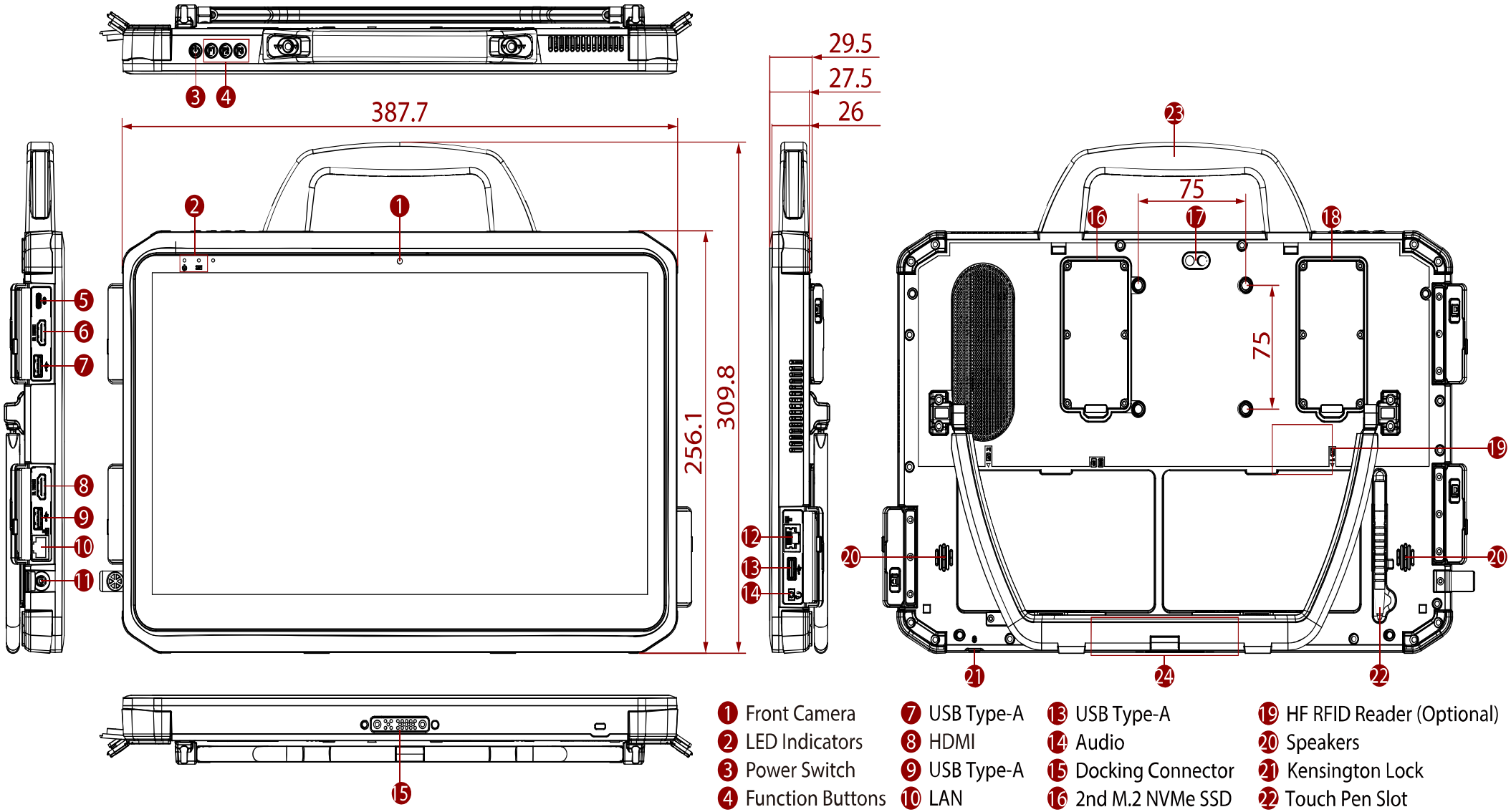

1 Front Camera
2 LED Indicators
3 Power Switch
4 Function Buttons
5 USB Type-C
6 HDMI
7 USB Type-A
8 HDMI
9 USB Type-A
10 LAN
11 DC Jack
12 LAN
13 USB Type-A
14 Audio
15 Docking Connector
16 2nd M.2 NVMe SSD
17 Rear Camera
18 2nd DDR5 RAM
19 HF RFID Reader (Optional)
20 Speakers
21 Kensington Lock
22 Touch Pen Slot
23 Handle
24 Kick-stand (Optional)

Unit: mm, not to scale. Errors and changes excepted. Version 250502